ITEM NO.	PART NUMBER	DESCRIPTION	MATERIAL	DRAWING #	QTY.
1	FP-SR-TAB	SIDERAIL TAB	1/4" HRS	10-1218	4
2	FP-SR-TAB ITEM 3	SIDERAIL END CAP ITEM 3	12ga HRS	10-1218	2
3	FP-SR-TAB ITEM 4	SIDERAIL END CAP ITEM 4	12ga HRS	10-1218	2
4	RT 3x1x14ga L 22	SIDERAIL L: 22"	RECT 3x1x14ga	11-1253	2

	REVISIONS		
REV.	DESCRIPTION	DATE	APPROVED
A	INITIAL RELEASE	6/24/2013	

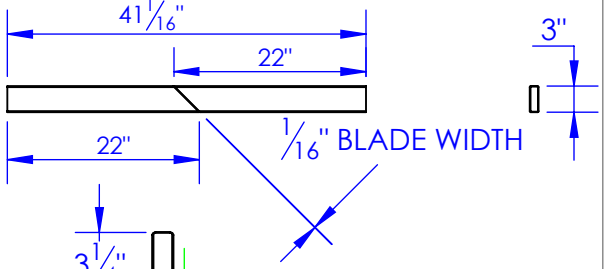

SUB-SIDERAIL 3249 LH
SIDE RAIL 3250 LEFT HAND

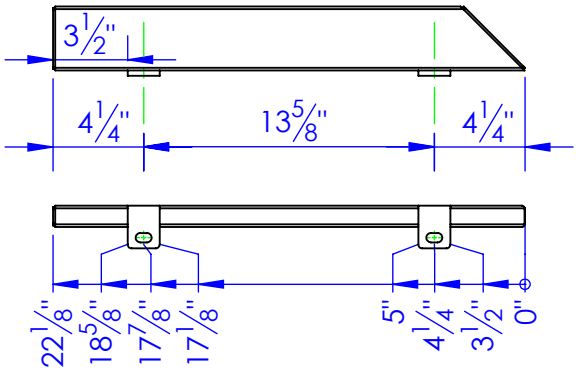

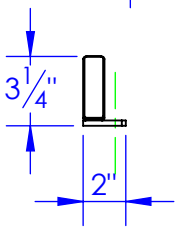

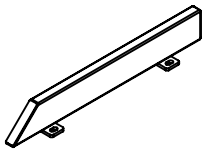

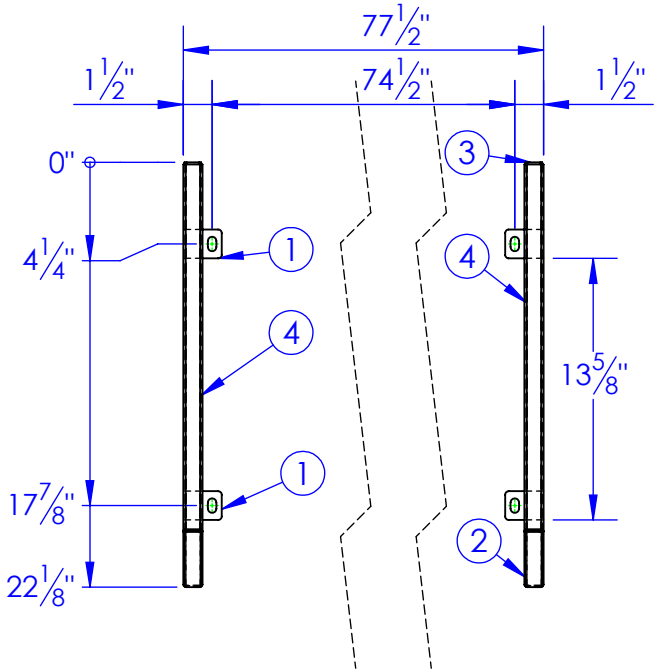

SUB-SIDERAIL 3249 RH
SIDE RAIL 3250 RIGHT HAND

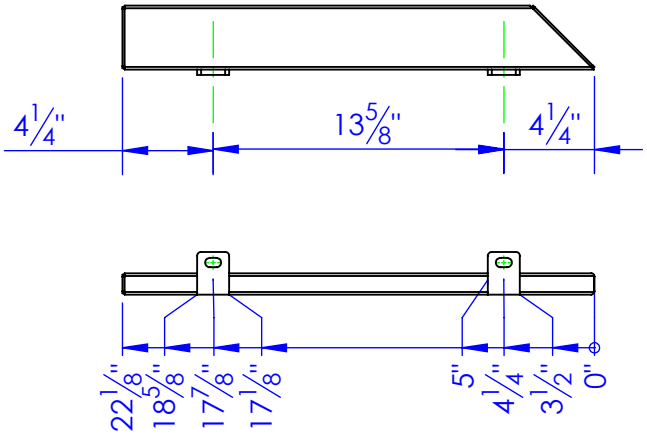

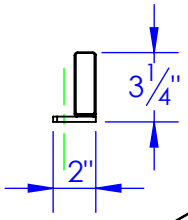

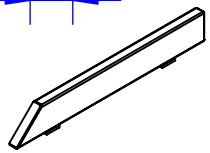

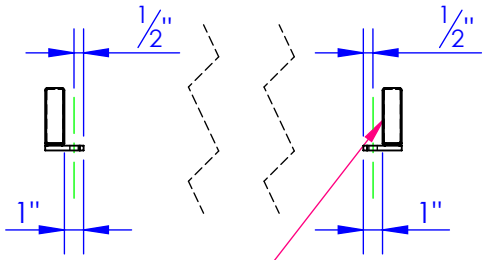

KEEP TUBE WELD SEAM TOWARD THE INSIDE

PROPRIETARY AND CONFIDENTIAL
THE INFORMATION CONTAINED IN THIS DRAWING IS THE SOLE PROPERTY OF TRIPLE C INC. ANY REPRODUCTION IN PART OR AS A WHOLE WITHOUT THE WRITTEN PERMISSION OF TRIPLE C INC. IS PROHIBITED.

DIMENSIONS ARE IN INCHES
TOLERANCES:
FRACTIONAL ±1/16
ANGULAR: MACH ±1 BEND ±
TWO PLACE DECIMAL ±010
THREE PLACE DECIMAL ±005

MATERIAL --

DO NOT SCALE DRAWING

	NAME	DATE
DRAWN	HEATH	7/31/2013
PART #	SUB-SIDERAIL 3249	
ASM #		

COMMENTS:
SIDERAIL 3250 CUT LENGTH 22"

P.O. BOX 248,
SABETHA, KS 66534

TRIPLE C INC.

SIZE	DWG. NO.	REV.
A	11-1253	A

SCALE:1:10 WEIGHT: 7.68 LBS SHEET 1 OF 1